REVISION HISTORY				
ZONE	REV	DESCRIPTION	DATE	APPROVED
	-	INITIAL RELEASE	5/17/2013	HHMI\\jordanj

GENERAL NOTES:
1. MATERIAL: **STAINLESS STEEL, 316L, SINTERED, 10-20 MICRON PORE SIZE**
2. SPECIAL FINISH: **N/A**
3. SURFACE ROUGHNESS (UNLESS SPECIFIED OTHERWISE): **N/A** (AVERAGE MICRO-INCHES)
4. INTERPRET DIMENSIONS AND TOLERANCES PER ASME Y14.5M-1994
5. DEBURR AND BREAK ALL SHARP EDGES, MAX 0.010" (UNLESS SPECIFIED OTHERWISE)
6. PARTS ARE TO BE CLEAN AND FREE OF OIL, GREASE, AND OTHER CONTAMINANTS
7. DIMENSIONS INCLUDE CHEMICALLY APPLIED FINISHES IF APPLICABLE

ALTERED ITEM NOTES:
1. THIS IS A PART MANUFACTURED BY ANOTHER VENDOR (DETAILS BELOW). THE DIMENSIONS SHOWN IN THIS DRAWING ARE REQUIRED MODIFICATIONS.
2. ALL REFERENCE/INSPECTION DIMENSIONS SHALL BE VERIFIED PRIOR TO ALTERATIONS.
2. ALTERED ITEM VENDOR: **MOTT CORPORATION**
3. ALTERED ITEM PART NUMBER: **1100-10-12-.062-20-A**

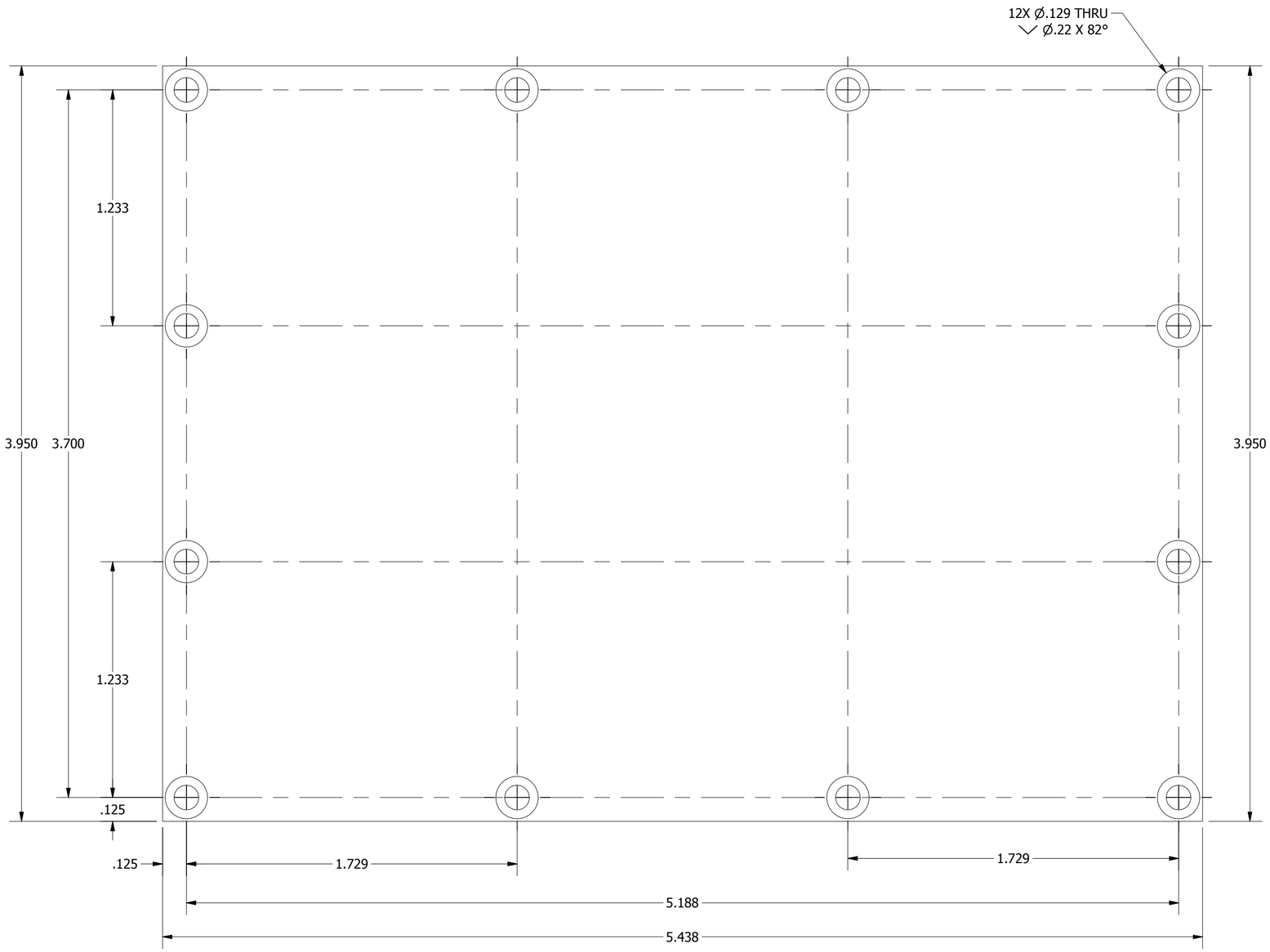

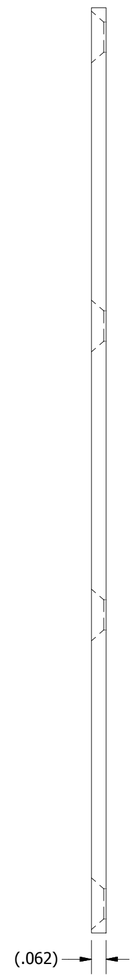

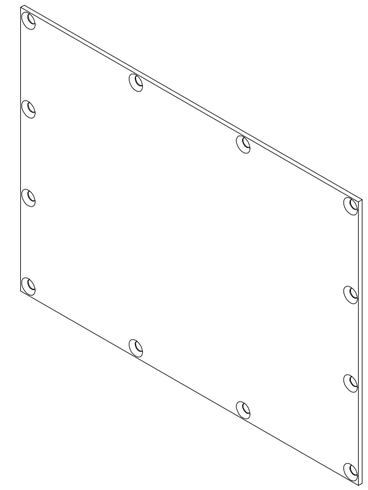

NOTICE:
INFORMATION CONTAINED IN THIS DOCUMENT OR ANY REPRODUCTION THEREOF, IS PROPRIETARY INFORMATION AND PROPERTY OF HOWARD HUGHES MEDICAL INSTITUTE. IT SHALL NOT BE DISCLOSED, COPIED, DUPLICATED OR USED FOR MANUFACTURE, PRODUCTION OR PROCUREMENT, WITHOUT THE EXPRESS WRITTEN PERMISSION OF HOWARD HUGHES MEDICAL INSTITUTE.

(UNLESS SPECIFIED OTHERWISE)
PRIMARY UNITS: INCHES
[SECONDARY UNITS]: MILLIMETERS

PRIMARY TOLERANCES:	
X.X	± 0.020
X.XX	± 0.010
X.XXX	± 0.005
X.XXXX	± 0.0005
ANGULAR	± 0.5 DEG

- DO NOT SCALE DRAWING -

THIRD ANGLE PROJECTION:

ALTERED ITEM DRAWING

HHMI
HOWARD HUGHES MEDICAL INSTITUTE

HHMI janelia farm research campus

SIMPLE CHILLED AIR SINTERED PLATE.ipt

SIZE	PART NUMBER	REV	SHEET
C	J001813	-	1 OF 1